326B

Nylon Sliding Cable Chain with un-screwable aluminium rods

Inner height (D) 30 mm
Strong double share Sideband & Frame construction with large anti-friction triple-pin. The chain incorporates large sliding-skid surfaces to offer durability, even with high speed/loads. The Alu-rod frames are un-screwable from inner and outer radius. As standard the chain comes with frames every second link, on request with frames every link. Separator systems are available.

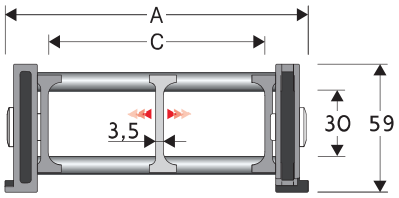

Separator	
- Unassembled	Part.no S2000F
- Assembled	Part.no S2000FMC
Pin	
	Part.no PG307

3

Technical characteristics

Speed	2 m/s
Acceleration	4 m/s²

For higher requirements please consult our technical dept.

A	B	C	D	R	Weight/m	Chain
mm	mm	mm	mm	mm	kg	Part Number
115	59	75	30	107-150-200-250-300	1,75	**326B075** □□□ *
140	59	100	30	107-150-200-250-300	1,80	**326B100** □□□ *
190	59	150	30	107-150-200-250-300	1,90	**326B150** □□□ *
240	59	200	30	107-150-200-250-300	2,05	**326B200** □□□ *
290	59	250	30	107-150-200-250-300	2,15	**326B250** □□□ *
340	59	300	30	107-150-200-250-300	2,25	**326B300** □□□ *
C+40	59	.....	30	107-150-200-250-300		**326B** □□□□□□ **

**Complete the code by inserting the value of the radius (R): Ex. 326B100 150*
***Complete the code by inserting the value of the quote C and the radius (R): Ex. 326B 1 2 3 1 5 0*
Chain equipped with aluminium rods every pitch: complete the code by inserting the letter D.
Ex. 326B100150 D

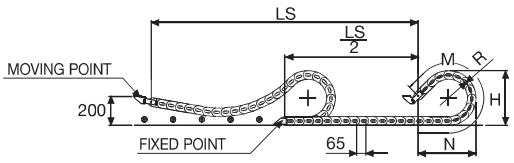

R	H	N	M
mm	mm	mm	mm
107	272	280	625
150	358	430	1000
200	458	605	1440
250	558	775	1875
300	658	945	2315

Length of chain (L)
Half travel distance $(\frac{LS}{2})$
plus length of curve (M)

$$L = \frac{LS}{2} + M$$

Version with Alu-rods on every second pitch.

End Brackets

The end brackets set allows the two ends of the chain to be attached to the equipment. One set includes two pivoting end brackets to be installed at the moving point and two standard steel end brackets to be installed at the fixed point.

Bright Zinc Plated Steel Movable Type* (moving point)**

Bright Zinc Plated Steel Type* (fixed point)**

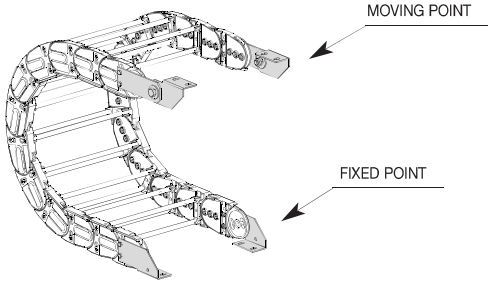

Fig. A
Chain fixed outside the radius. (Fig A)

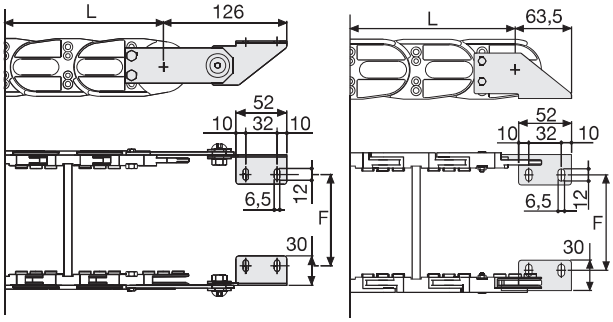

Chain Type	F mm
326B075	67
326B100	92
326B150	142
326B200	192
326B250	242
326B300	292
Special widths F=A-48	

Bright Zinc Plated Steel Type Part Numbers

Complete Set Assembled

Chain Type	End Brackets Set
326B...	**A326KM**

Complete Set Unassembled

Chain Type	End Brackets Set
326B...	**A326K**

*** *Available on request in stainless steel*

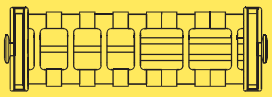

Supplementary movable separators.

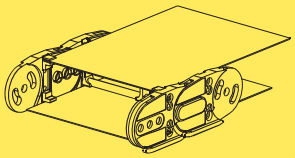

Steel laminar cover.

Special tool to remove the connecting pivots: Part Number PZ036.

For further information please consult Brevetti Stendalto's Technical Office